Wheat Milling & Counting

Grade Level: K-2

Essential Skills: 3,4, 9

Math: K.CC.4, K.MD.1, 1.MD.1, 2.MD.2

Time: 1.5 hours

Materials:*Wheat Milling Kit
- Wheat Grinder*
- Wheat for Milling*
- Seeds for counting pack per student*
- Wheat Seed Measuring Page per student
-Tape
-Seed Survivor Pictures*

***Materials Available from Oregon Agriculture in the Classroom.**

AITC Library Resources:
Books:
Bread Comes to Life- A Garden of What and a Loaf to Eat Book
Wheat- A True Book
From Wheat to Bread
The Wheat We Eat

Supplemental Materials:
Wheat Heads
US Wheat Trifold
Cereal Grain Types & Varieties

More Lessons:
From Wheat to Macaroni

09/19

Description:
Students will explore the concept of milling wheat for flour for use in their daily lives and use wheat kernels as a nonstandard unit of measurement.

Background:
Oregon farmers grow primarily soft white wheat, with wheat being grown in 24 Oregon Counties. Six types of wheat are grown in the United States with each one having a different purpose.

Six Classes of Wheat
1. Hard Red Winter: A versatile class that has excellent milling and baking characteristics.
2. Hard Red Spring: Best for making specialty breads like hearth breads, rolls, bagels and pizza crust.
3. Soft Red Winter: Most profitable choice and produces a wide variety of products like cookies, crackers or cakes.
4. Soft White: Low in moisture with excellent milling results. The most ideal for exquisite cakes and pastries.
5. Hard White: Best for making whole wheat foods, pan breads, or flat breads.
6. Durum: Hardest of all wheat classes. Highest gluten content and is best used for premium pasta products and some Mediterranean breads.

Wheat has two distinct growing seasons, winter wheat and spring wheat. Winter wheat is planted in the fall whereas spring wheat is planted in the spring. The majority of wheat production in the United States is winter wheat. Once the land is prepared, the seeds are sown in furrows created by the use of a wheat drill. A wheat drill is attached to a tractor and allows for the wheat seeds to be spread evenly and in place.

For large wheat crops, the use of a combine machine allows for quick and easy harvesting of acres of wheat in a short period of time. Winter wheat is harvested in the spring or summer, while spring wheat is harvested in the late summer or early fall.

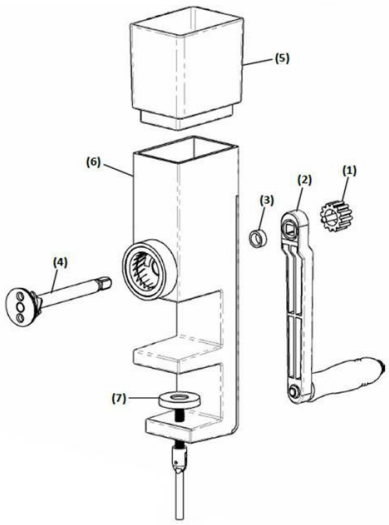

1. Adjustment Knob
2. Handle
3. Nylon Washer
4. Milling Cone & Shaft
5. Housing
6. Body
7. Clamp Screw

Directions:
Part I: Grinding Wheat using a Grain Mill
Set-Up
1) Insert the shaft and attach milling cone through the body.
2) Slip the nylon washer on the end of the shaft, then attach the handle and adjustment knob.
3) Mount the grinder on a sturdy table or counter top, then secure with the clamp.
4) Select the desired texture by turning the adjustment know clockwise for fine milling and counterclockwise for coarser milling.

Part II: Wheat Scramble- From Seed to Bread

1) Using the Seed Survivor photos, describe to students the process of planting and processing wheat.
Farmers grow wheat planting in the fall or spring depending on the type of wheat. When the plant has matured and is ready for harvest, farmers use a machine called a combine. The combine cuts the crops and separates the seeds from the rest of the plant. The combines thresh the seeds, removing the seeds from the plant. Using a wheat head rub it in between your hands to simulated the threshing of a combine. The combine separates the seed and stores in a bin where it will later be hauled to a processing plant. The plant material or debris that is separated from the seed is called chaff and is made into bedding material for animals called straw. Once the seed is hauled to the process plant it is milled.
2) Split class into 2 teams, give each team a set of the Seed Survivor photos that have been mixed up.
3) Have students race to put the photos in order from seed to bread. You should have two spots in the classroom where students can hang the pictures in order for the relay using tape to hang.
4) When students have finished, their whole group should be sitting down quielty at the finish line.
5) Check each groups work, correcting the order if needed.
They should be arranged in the following order: C, E, H, A, L, B, D, I, G, F, J and K.

Part III: Milling Wheat to Flour

Now, that we have seen the process of planting we are going to take a deeper look at milling our own wheat into flour.
1) Add one cup of grain in the housing chamber of the assembled grain grinder.
2) Place a cup under the body of the mil to catch the flour once the grain is ground.
3) Adjust the texture as needed.
4) Begin the milling process by turning the handle. Let students take a turn milling the wheat into flour.

Part IV: Counting Seeds in the Kernel

1) Tell students that each wheat head contains kernels also know as the wheat seeds. Today, we are going to count the average amount of seeds that come from one wheat plant. Provide each student or pair of students with a pack of seeds.
2) Using the grid to help count seeds, students will place seeds into groups of five in each box of the grid. Have students count the total amount of seeds in their packets using the grid as a tool. (There should be 50 seeds).
3) Ask students how many seeds they counted, this is the amount of seeds of wheat plant on average has.
4) Using the wheat seeds a nonstandard measurement unit, have them measure the objects listed on their worksheet.

Lesson adapted from Oklahoma Agriculture in the Classroom.

Activity Page

Wheat Seed Measuring Page

Student Name: _____

Use the table below to count the number of wheat seeds one wheat plant produces. Place five wheat seeds in each box to help you count the total number of seeds.

How many seeds come from one wheat plant: _____

Using the wheat seeds as a measuring tool, measure the length of each object below. Then, measure each object with a ruler in inches.

1. A book is _____ wheat seeds long and _____ inches long.

2. A ruler is _____ wheat seeds long and _____ inches long.

3. A box of crayons is _____ wheat seeds long and _____ inches long.

4. A folder is _____ wheat seeds long and _____inches long.

5. A marker is _____wheat seeds long and _____ inches long.

6. My shoe is _____ wheat seeds long and _____ inches long.

7. A glue stick is _____wheat seeds long and _____inches long.

9. My name tag is _____ wheat seeds long and _____inches long.

10. My pencil is _____ wheat seeds long and _____ inches long.

A wheat seed has been selected to grow. This is a common crop in North America.

Farmers plant the seeds and add nutrients (plant food) to the soil. Fertilizer nutrients can be applied based on science so the seed gets exactly what it needs to grow. What are other ways to add nutrients?

The seeds use nutrients (especially Nitrogen, Phosphorous and Potassium), plus water and sunlight to grow. Healthy soil also has worms. How do worms help plants?

Some farmers spray for plant disease, insect and weed control to protect the crop as it grows.

All crops need water to grow, but some need more water and some need less depending on the seed. Irrigation is one way to add more water to a crop.

Farmers care for their crops. They frequently check on the growth of the crop and decide when it is time for harvest. It takes about 120 days (4 months). When the kernel cannot be dented by their thumbnail it is ready!

Harvest time! A combine cuts down the wheat and collects the seeds (grain). As the wheat grew it used the soil nutrients so after harvest there are less nutrients left in the soil. That's why nutrients are added each year.

Grain is trucked to storage bins, then to large grain terminals and finally to the flour mill.

Once the grain is removed from the field, some farmers will bale the straw (the stems and leaves). Straw can be used for livestock feed or bedding.

Flour mills grind up the grain into flour.

The flour is bagged.

Some breads are made from wheat flour. What else is made from wheat?